LITBLOCKS

PRODUCT DESCRIPTION

TheMobile Light Boxsystem powered by SEGO seamlessly integrates cutting-edge technology with user-friendly design. Boasting a toolless assembly down to its foundation, Mobile Light Box is crafted to enhance your display experience. Magnetic electrical connectors illuminate the pre-installed UL certified LED lights within the profiles, ensuring a sleek appearance with concealed wires. The aluminum frame supports edge-to-edge customizable SEG backlit fabric graphics on both the front and back. Beyond its visual appeal, Mobile Light Box is portable, modular, and highly coveted, setting it apart from other lightboxes. Every detail has been meticulously considered, right down to the durable foam-cut carry bag, which is uniquely designed to safeguard and organize all components.

DISPLAY DIMENSIONS MLB 200 x 200 cm (78.74″ x 78.74″) MLB 200 x 225 cm (78.74″ x 88.58″) MLB 200 x 240 cm (78.74″ x 94.49″) MLB 200 x 250 cm (78.74″ x 98.43″)

DISPLAY CONSTRUCTION

Aluminum extrusionframewith plastic components

GRAPHIC MATERIAL

DyeSub Backlit Fabric

GRAPHIC FINISHING

Siliconebeadingsewnontoedge of graphic

SHIPPING WEIGHTS & DIMENSIONS

MLB200	**200 x 200**	49 x 8 x 14	32.2 lbs.
		49 x 8 x 14	26.9 lbs.
	200 x 225	49 x 8 x 14	35.5 lbs.
		58 x 8 x 14	29.5 lbs.
	200 x 240	49 x 8 x 14	36.2 lbs.
		58 x 8 x 14	29.8 lbs.
	200 x 250	49 x 8 x 14	36.6 lbs.
		58 x 8 x 14	30.0 lbs.

SUPPORT CONNECTION

LED LIGHT SPECIFICATION

BRAND	Osram
POWER	3W
CCT (COLOR TEMP)	6800k
AVERAGE BEAM ANGEL	20 °
LM/W	130
AVG LM/M^2	4800-5800
VOLTAGE INPUT	24V

LUMENS

VOLTAGE (V)	24
POWER (W)	180
LM/W	130
TOTAL LM	23400
AVG LM	5850
CU	.8
EAV	4680

TRANSFORMER SPECIFICATION

POWER RATE	TRANSFORMER 252W
CERTIFICATE	SUL, CE, GEM
VOLTAGE INPUT	100-240V
VOLTAGE OUTPUT	24V

TOOL FREE CONNECTION

MAGNETIC WIRE CONNECTION

CLEAN CABLE MANAGEMENT

TOOL FREE FOOT CONNECTION

PARTS LIST

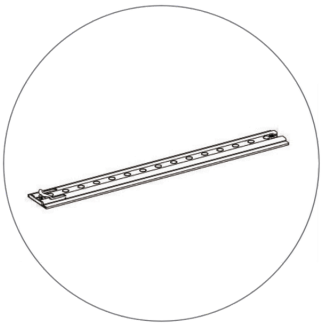

(qty 2)
Horizontal Profile L

(qty 2)
Vertical Profile Top

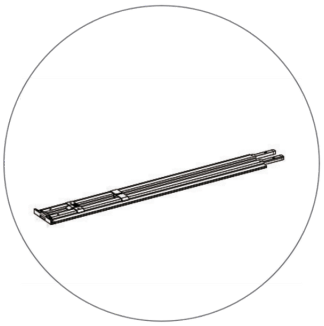

(qty 2)
Vertical Profile Bottom

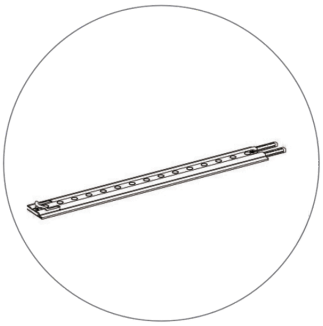

(qty 2)
Horizontal Profile R

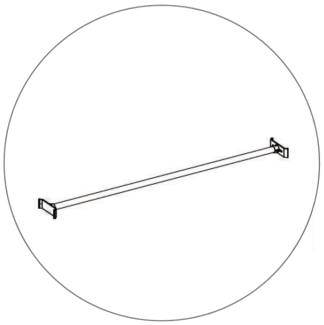

(qty 4)
Mid Pole

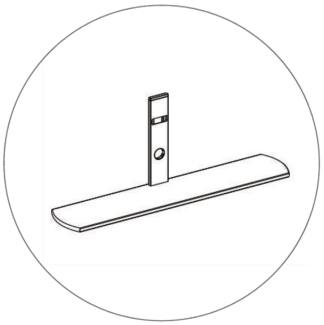

(qty 2)
Feet

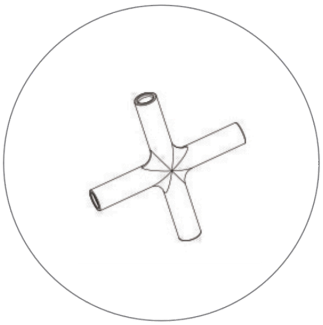

(qty 1)
MP Cross

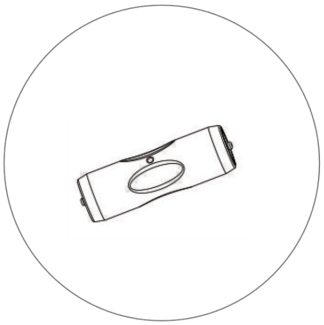

(qty 2)
LED Connector

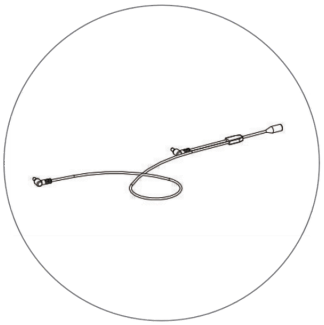

(qty 1)
Y Cable

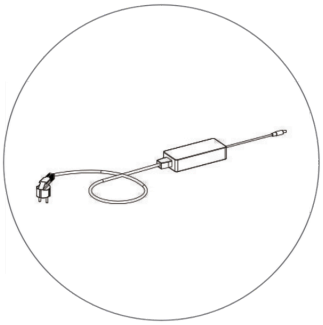

(qty 1)
Transformer

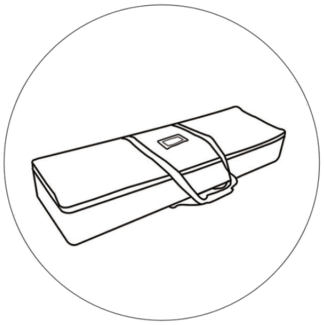

(qty 2)
Travel Bag

AVAILABLE ACCESSORIES

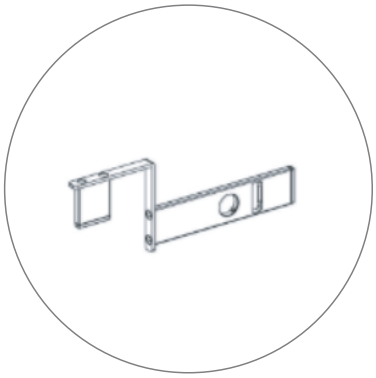

Bridge Connector

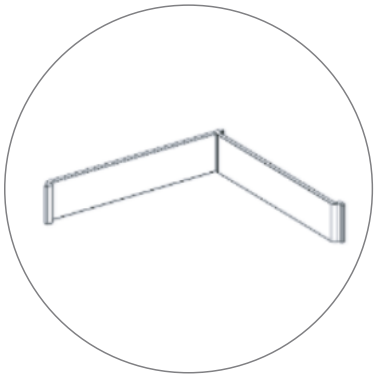

Inside Connector 90 Degrees

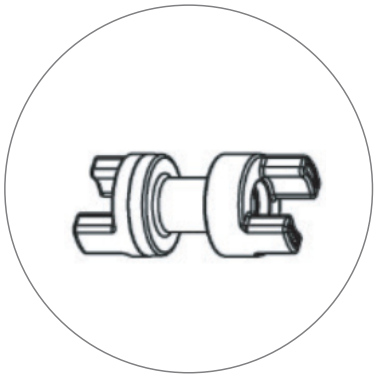

Straight Connector

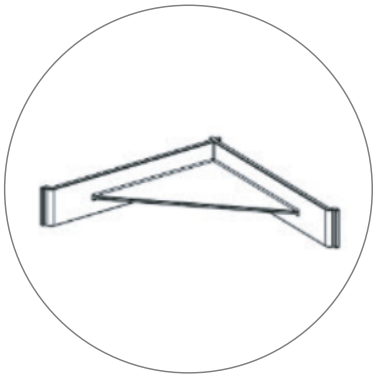

Outside Connector 90 Degrees

High-Low Connector

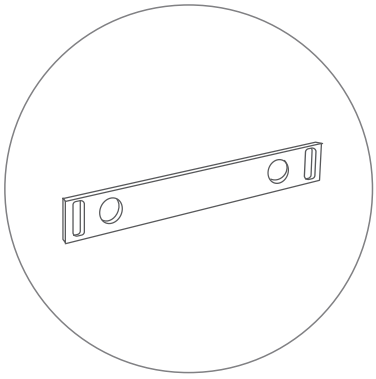

Stacking Connector

LITBLOCKS

SET UP INSTRUCTIONS

①

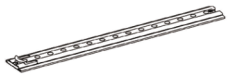

③

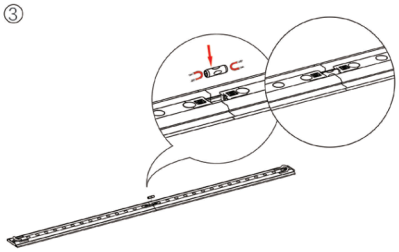

②

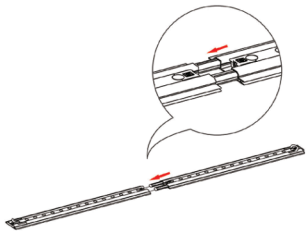

④

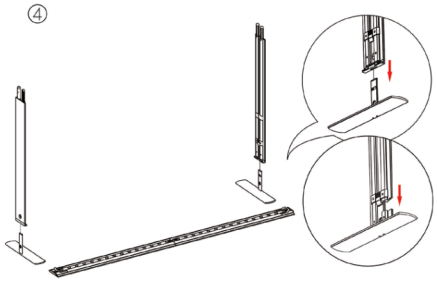

⑤

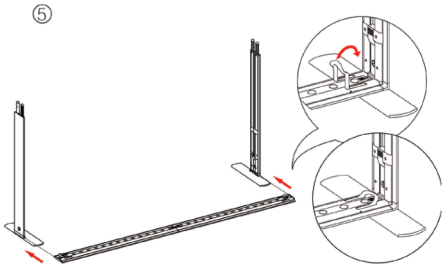

⑥

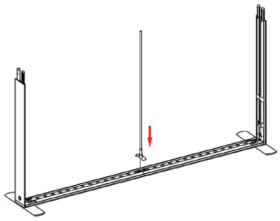

⑦

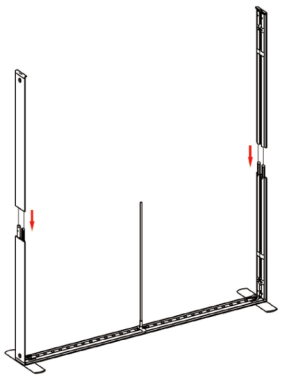

⑧

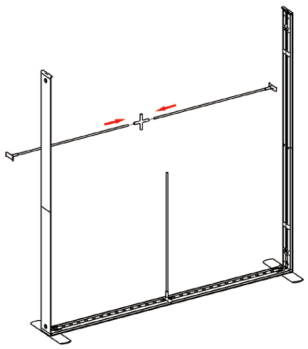

⑨

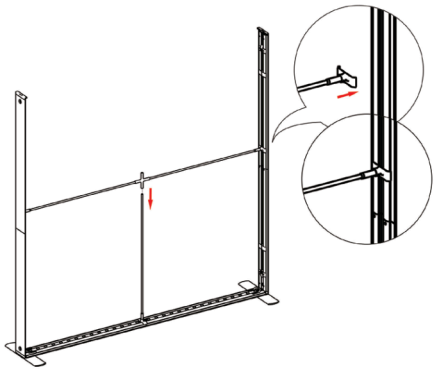

⑩

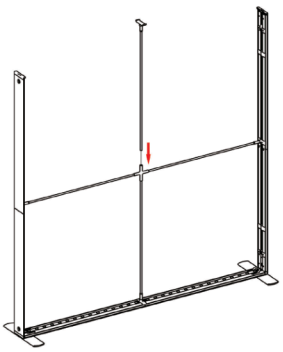

⑪

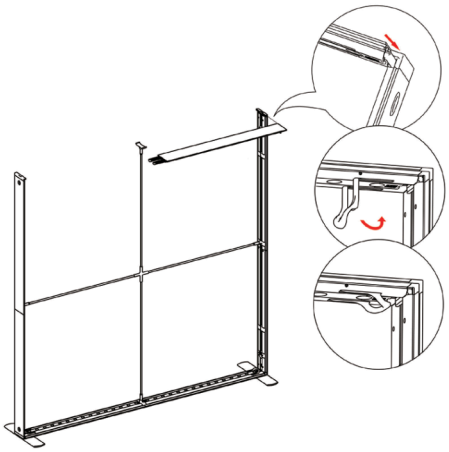

⑫

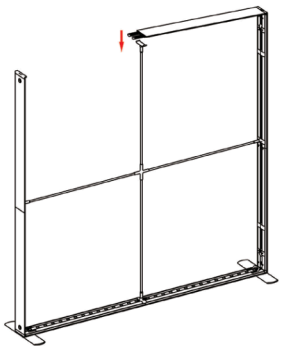

⑬

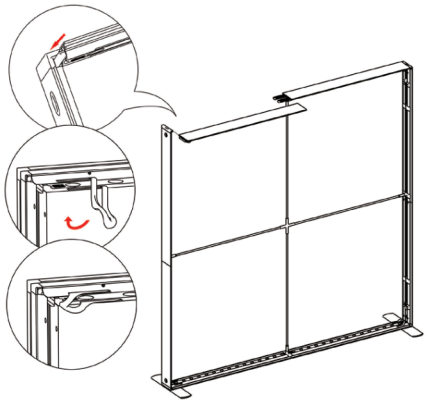

⑭

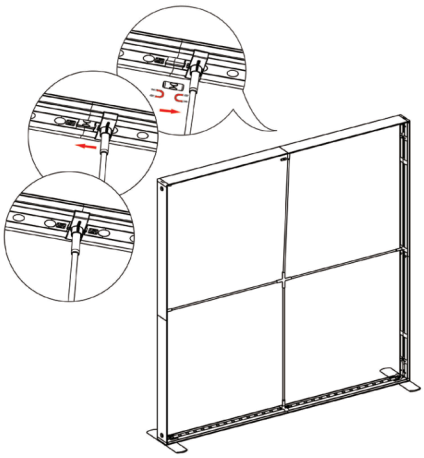

⑮

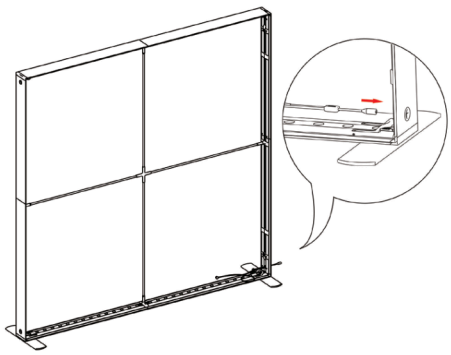

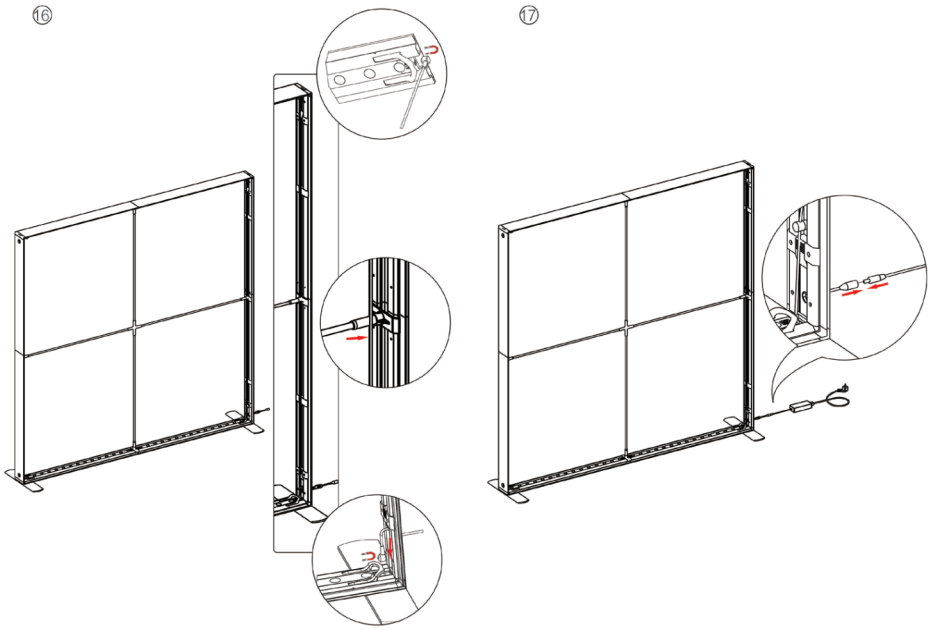
⑯
⑰